ARIA-2500B PARTS LIST　　型番　ARIA-2500B

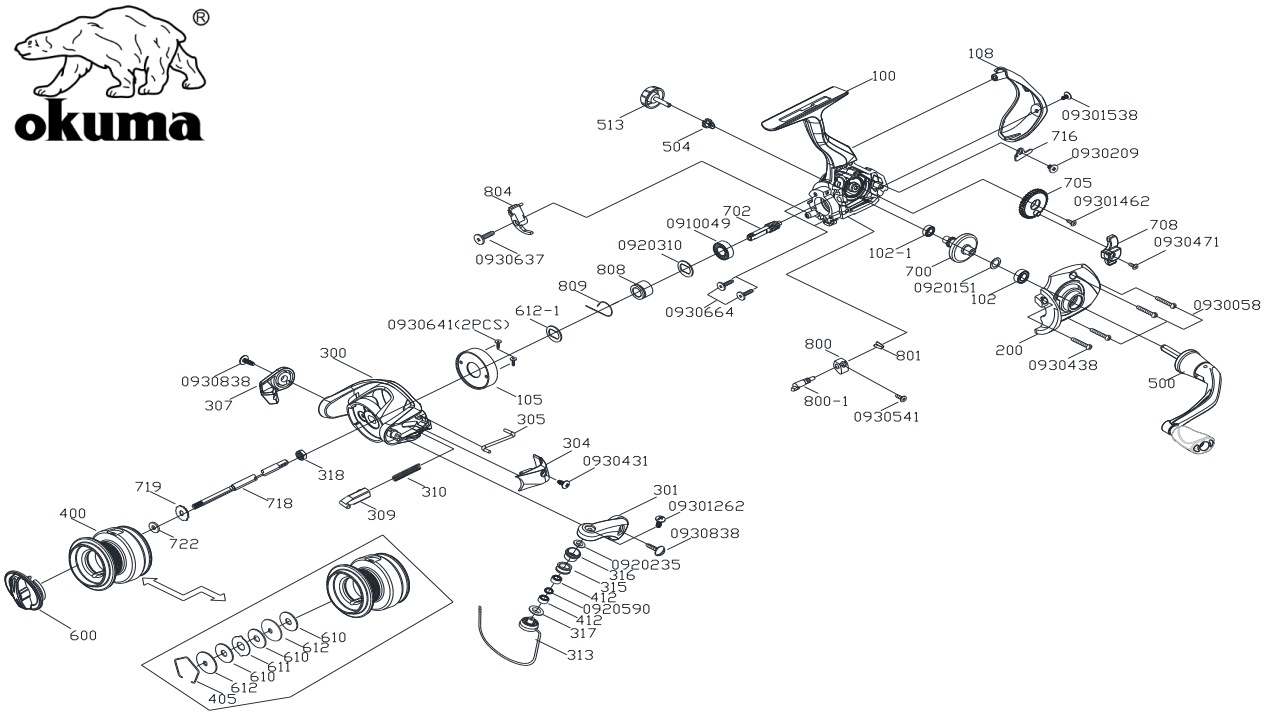


| KEY № | | PARTS NAME | 希望小売価格（税込） | KEY № | | PARTS NAME | 希望小売価格（税込） |
|---|---|---|---|---|---|---|---|
| 100 | | Main body | ¥814 | 705 | | Transmission gear | ¥352 |
| 102 | | Bushing | ¥176 | 708 | | Oscillating slider | ¥275 |
| 102-1 | | Bushing | ¥176 | 716 | | Oscillation slider plate | ¥176 |
| 105 | | Pinion bearing fixed plate | ¥176 | 718 | | Main shaft | ¥176 |
| 108 | | Rear cap | ¥330 | 719 | | Click gear | ¥176 |
| 200 | | Side plate | ¥363 | 722 | | Click gear washer | ¥121 |
| 300 | | Rotor | ¥671 | 800 | | Anti-reverse/anti-re lever | ¥176 |
| 301 | | Bail arm | ¥319 | 800-1 | | Anti-reverse/anti-re lever | ¥176 |
| 304 | | Bail arm cover | ¥176 | 801 | | Anti-re lever spring | ¥176 |
| 305 | | Kick lever | ¥176 | 804 | | Anti-re lever pin | ¥176 |
| 307 | | Bail holder | ¥627 | 808 | | Ratchet | ¥176 |
| 309 | | Bail arm slider | ¥176 | 809 | | Silent spring | ¥176 |
| 310 | | Compression spring | ¥121 | 0910049 | | Ball bearing | ¥462 |
| 313 | | Bail wire assy. | ¥627 | 0920310 | | Washer | ¥121 |
| 315 | | Line roller | ¥176 | 0920590 | | Washer | ¥121 |
| 316 | | Line roller bushing | ¥176 | 0920151 | | Washer | ¥121 |
| 317 | | Line roller washer | ¥121 | 0920235 | | Washer | ¥121 |
| 318 | | Rotor nut | ¥176 | 0930058 | | Screw | ¥121 |
| 400 | | Spool assy. | ¥2,277 | 0930541 | | Screw | ¥121 |
| 405 | | Drag washer retainer | ¥121 | 09301462 | | Screw | ¥121 |
| 412 | | Spool bushing | ¥176 | 09301538 | | Screw | ¥121 |
| 500 | | Handle assy. | ¥1,683 | 0930438 | | Screw | ¥121 |
| 504 | | Handle screw cap washer | ¥121 | 0930471 | | Screw | ¥121 |
| 513 | | Handle cap | ¥176 | 0930209 | | Screw | ¥121 |
| 600 | | Drag knob | ¥583 | 09301262 | | Screw | ¥121 |
| 610 | | Drag washer | ¥176 | 0930664 | | Screw | ¥121 |
| 611 | | Eared washer | ¥176 | 0930641 | | Screw | ¥121 |
| 612 | | Key washer | ¥121 | 0930431 | | Screw | ¥121 |
| 612-1 | | Key washer | ¥121 | 0930637 | | Screw | ¥121 |
| 700 | | Drive gear | ¥968 | 0930838 | | Screw | ¥121 |
| 702 | | Pinion gear | ¥814 | | | | |

209OKJ11224271

※部品の希望小売価格は、パーツリスト製作後の為替変動等・価格変更とタイムラグにより、表示の価格と異なる場合がございます。
※部品・図面の更新等により、同一の部品でも図面上の部品ナンバー・名称等が異なる場合がございます。ご了承下さい。